SF2A 2023
M. N'Diaye, A. Siebert, N. Lagarde, O. Venot, K. Baillié, M. Béthermin, E. Lagadec, J. Malzac, J. Richard (eds)

PLANÈTE SCIENCES AND THE JEAN-MARC SALOMON OBSERVATORY IN BUTHIERS, FRANCE: CITIZEN SCIENCE PROJETS

P. Barroy[1,2], M. Irzyk[1], J.-M. Vienney[1], Y. Delisle[1], P.-F. Rocci[1,3], D. Quéant[1], S. Neveu[1], M. Serrau[1,3], A. Lekic[1,3,4], D. Carlier[1], J.-B. Bellier[1], J.-P. Godard[1], C. Courson[1], M. Grandidier[1,4], F. Targa[1], J. Paufique[1 5], P. Traverse[1], J. Rodriguez[1], O. Desormiere[1] and T. Midavaine[1,3]

Abstract. Planète-Sciences is a French national association developing & managing a large professional-class telescope in an observatory for outreach and citizen science. This poster aims at presenting some of its capabilities and to inspire you to organize your own experiment or join in with those on offer.

Keywords: astronomy, citizen science, occultations, exoplanets, light curve, spectroscopy, asteroid, TJMS

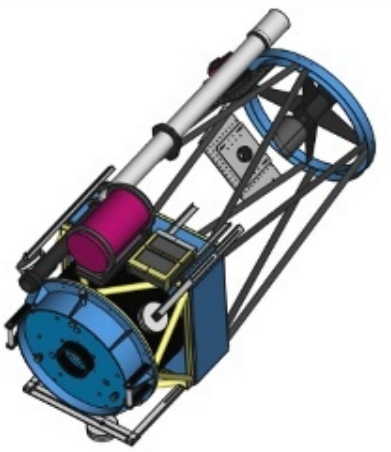

Fig. 1. Telescope Jean Marc Salomon schematic

1 Introduction

Planète Sciences (Planète-Sciences 2023) welcomes ∼100000 people each year for a wide range of activities, thanks to ∼80 salaried staff and ∼1000 volunteers. Planète Sciences manages an observatory, Centre d'Astronomie Jean-Marc Salomon (UAI code 199). Located in Buthiers near Malesherbes, the observatory is easily accessible to a large audience, by RER commuter train from Paris, Ile de France region, or from Loiret, Centre region, even though it has a relatively unspoilt sky (SQM ∼21 magnitudes per square arcsecond, seeing ∼2", Gâtinais regional nature park). Accommodation of groups of up to a few tens nearby can be provided by Buthiers leisure park. A 600 mm diameter telescope, the Télescope Jean-Marc Salomon (TJMS), is on site, as are a number of other instruments, mobile instruments for all kinds of astronomical activities (Sol'Ex, Coronado, Cassegrain, Newtonian), enabling mobile manipulations and easy accompaniment of novices in Pro-Am programs.

[1] PLANÈTE-SCIENCES, Observatoire JM Salomon, 73 rue des Roches, 77760 , Buthiers, France
[2] Université de Picardie Jules Verne, 80000 Amiens, France. mail: pierre.barroy@u-picardie.fr
[3] Société Astronomique de France 3, rue Beethoven, 75016 Paris
[4] IPSA, Institut Polytechnique des Sciences Avancées, 63 boulevard de Brandebourg 94200 Ivry-Sur-Seine, France
[5] European Southern Observatory,Karl-Schwarzschild-Str. 2, 85748 Garching bei Muenchen, Germany

2 Main equipment

TJMS is a Newton-Cassegrain type telescope used mainly in Newton configuration, with a 2010 mm focal length and a 600 mm primary mirror (F/D∼3.35) recently re-illuminated (MCM 2021), with a pointing speed of 1.5°/s, and an estimated periodic error of 0.5" in 1 minute (MCMT electronics). Now equipped with 4 holding stages (the secondary mirror can be rotated in the direction of each easily), 3 of which have motorized focusing (Lacerta, FLI), the TJMS is instrumented with an Imaging chain, Spectroscopy and 2 Eyepiece-holding stages.

2.1 CMOS imaging chain

Behind a 3" Wynne ASA field corrector is a QHY 268 Pro acquisition camera, with integrated GPS enabling acquisitions at up to 50 frames per second. This camera is built around a Sony IMX571 monochrome CMOS sensor with 78% quantum efficiency, a 51000-electron well, low-gain readout noise, low dark current, and a very low power consumption. 7 filters are camera-ready with Gaia G, Grp and Gbp from the RAPAS (RAPAS 2023) program and Halpha, OIII, SII standard filters. Off-axis guiding is also included in this setup.

2.2 Spectroscopy

A Shelyak LISA spectroscope (Shelyak 2023) has been adjusted to the TJMS (reduction ×0.86). LISA is a High Brightness spectroscope ideal for weak objects : Novae & Supernovae, Planetary Nebulae, Comets, Symbiotic stars, Cataclysmic variables stars and galaxies. Its calibration module makes calibration very easy thanks to an Argon/ Neon lamp with a large number of emission lines over the main spectral range. This same module is equipped with a Tungsten lamp to produce flat fields. With a resolving power R∼500 to 1000 (depending on entrance slit, R∼700 at 35μm), its spectral range covers the visible range between 400 to 700 nm. An ASI294 MM PRO acquisition camera and ASI 174 mini-guiding cameras complete this setup.

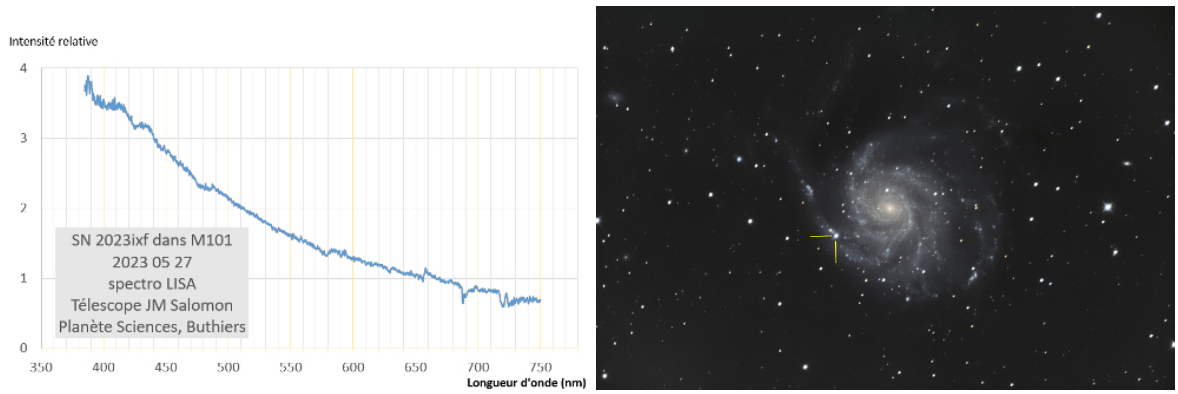

Fig. 2. Left: spectrum of supernova SN2023ixf in M101 galaxy (TJMS) **Right:** same supernova imaged (TJMS)

2.3 Examples of citizen Science at the Astronomy Center JM Salomon

In this observatory, many projects contributing to Sciences can be and are carried out. Asteroids (125718) Jemasalomon and (125592) Buthiers were discovered there on 2001-12-15 by J.-C. Merlin. For instance, we participate in regular stellar occultation campaigns. There have also been measurements of the occultation by Pluto of stars, which have helped understand the dynamics of the tenuous Pluto atmosphere (Meza et al. 2019), or by asteroids (LUCKYSTAR 2023), or by Trojan asteroids (LUCY 2023). There are regular contributions to Exoplanet research e.g. in Exoplanet Transit Database (ETD 2023) or Exoclock (EXOCLOCK 2023, Ariel space mission) (Kokori et al. 2023). Rotation curves of asteroids & Light curves of variable stars are also regularly tackled there (CdR/CdL 2023). There are also more recent participations in KiloNova Catcher, Binast, BESS, ARAS programs. We also welcome events (e.g., European Symposium on Occultation Projects 2019, Technical WeekEnds, Space-Camp 2023)

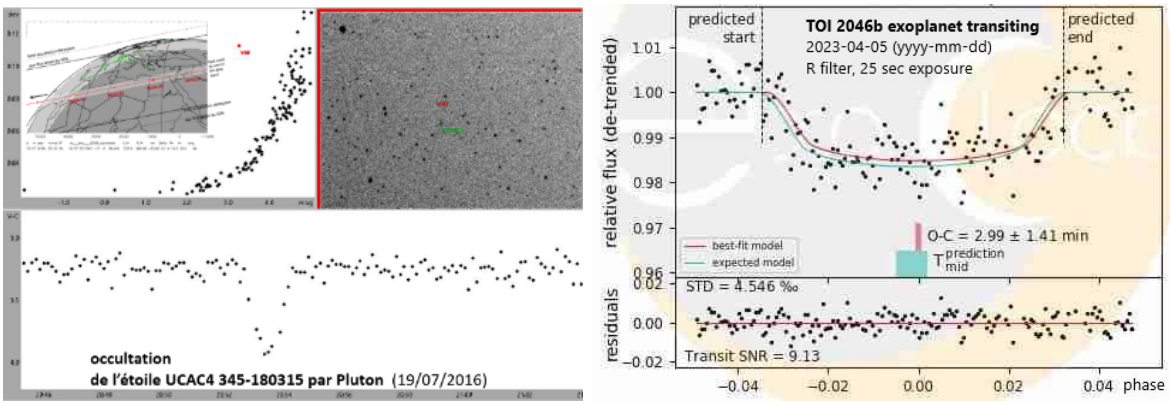

Fig. 3. Left: occultation of a star by Pluto (TJMS) **Right:** transit of Exoclock candidate TOI2046b (TJMS)

3 Conclusion

Recently a special group ("Comité de Promotion Scientifique" CPS) has been developped within Planète Sciences in order to accompany newcomers in experiments that could benefit professionnal astronomy.

Planète Sciences also encourages young people, either in clubs or in schools or universities and their teachers through various programmes (e.g. "Arpenter l'Univers") and can build new programmes. *Please, Come join us with your project/s !*

References

CdR/CdL. 2023, CdR/CdL, Courbes de rotation d'astéroïdes et de comètes, Courbes de luminosité d'étoiles variables régulières, `https://obswww.unige.ch/~behrend/page/cou.html`

ETD. 2023, Exoplanet Transit Database ETD, `http://var2.astro.cz/ETD/index.php`

EXOCLOCK. 2023, EXOCLOCK (ephemerides of transiting Exoplanets for the ARIEL space mission), `https://www.exoclock.space/`

Kokori, A., Tsiaras, A., Edwards, B., et al. 2023, ApJS, 265, 4

LUCKYSTAR. 2023, LUCKY STAR ERC project, `https://lesia.obspm.fr/lucky-star/`

LUCY. 2023, LUCY NASA Mission, Occultations from Ground, `https://lucy.swri.edu/occultations.html`

MCM. 2021, MCM Optique, `https://www.mcm-optique.com/`

Meza, E., Sicardy, B., Assafin, M., et al. 2019, A&A, 625, A42

Planète-Sciences. 2023, PLANETE SCIENCES section Astronomie, `https://www.planete-sciences.org/astro`

RAPAS. 2023, Réseau Amateurs Professionnels pour les Alertes Scientifiques, `https://rapas.imcce.fr/`

Shelyak. 2023, SHELYAK Instruments LISA, `https://www.shelyak.com/produit/pf0021vis-lisa-slit-visible/?lang=en`